R13

Code No: 111AH

JAWAHARLAL NEHRU TECHNOLOGICAL UNIVERSITY HYDERABAD
B.Tech I Year Examinations, December - 2018

ENGINEERING DRAWING

(Common to CSE, MIE, PTM)

Time : 3 hours **Max Marks: 75**

Answer all five questions
All questions carry equal marks
- - -

1.a) A point on the hyperbola is 60 mm from one of the asymptote and 30 mm from the second asymptote. Draw the curve if the angle between them is 120^0.

b) Construct a diagonal scale of 1:25 to read meters, decimeters and centimeters and long enough to measure 4 m. Mark on it a distance of 2.47 m. [7+8]

OR

2.a) A disc, radius 30 mm is rolling on the outside surface of a curved surface of radius 90 mm. Draw the path traced by a point on the circumference of the disc. The point is initially in touch with the base circle. Name the curve. Also draw a tangent and normal at a distance of 125 mm from the center of the base circle.

b) Draw an involute of a pentagon of side 30 mm. Draw a tangent and normal to the curve at a distance of 120 mm from the center of the pentagon. [9+6]

3.a) A point L is lying in the first quadrant. The shortest distance of the point from XY line is 55 mm. If the point is 30 mm above H.P. Draw its projections and also find the distance to the point from V.P.

b) A line AB of 75 mm long is making an angle of 55^0 with XY line in the front view and length of the top view is 55 mm. End A is 15 mm above H.P. and 10 mm in front of V.P. Draw the projections of the line and its inclinations with H.P. and V.P. [5+10]

OR

4.a) A line AB 50 mm long is parallel to VP and inclined at 35^0 with H.P. Point A is 20 mm above H.P. and 40 mm in front of V.P. Draw the projections of the line.

b) A plate having shape of an isosceles triangle has base 50 mm long and altitude 70 mm. It is so placed that in the front view it is seen as an equilateral triangle of 50 mm sides one side inclined at 45^0 to XY. Draw its top view. [5+10]

5. A hexagonal prism of base 30 mm and axis 70 mm long has an edge of the base in on V.P. Draw the projections, if the rectangular face containing that edge makes an angle of 45^0 with V.P. [15]

OR

6. A pentagonal pyramid of base 30 mm and 60 mm long axis is laying on one of its face is on H.P. It is cut by a cutting plane perpendicular to V.P. and inclined at 60^0 to H.P. The cutting plane is passing through the opposite corner of the base. Draw the sectional top view and true shape of section. [15]

7. A cone of height 60 mm and base diameter of 50 mm is resting on its base. A semicircular hole diameter 26 mm is drilled such that the axis of the hole is perpendicular to the V.P. and intersecting the axis of the cone at a height of 20 mm above H.P. Develop the lateral surface of the cone if the top surface of the hole is flat. [15]

OR

8. A cylinder with a 60 mm base diameter and height 80 mm long is resting on its base on H.P. It is penetrated by another cylinder of 50 mm base diameter and height 90 mm long, such that their axes intersect each other at right angles. Draw the projections of the combination and show the curves of intersection. [15]

9. Draw the orthographic projections of the following figure. All dimensions are in mm. [15]

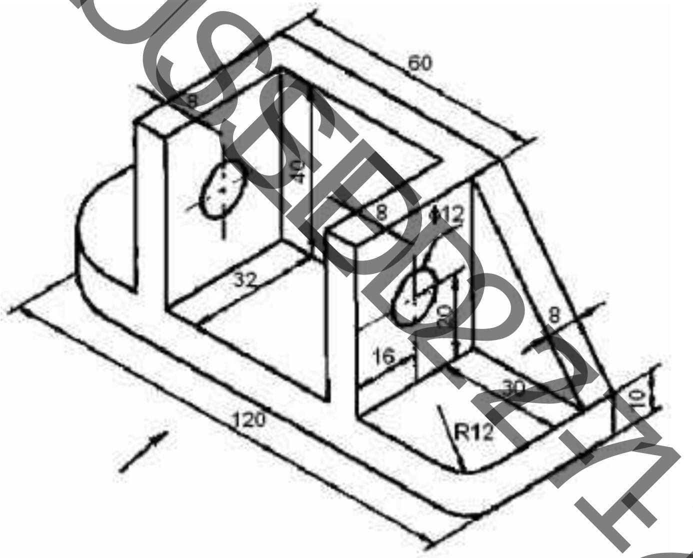

OR

10. A pentagonal plane of 40 mm side is parallel to and 15 mm above the GP. The corner which is nearest to PP is 15 mm behind it and an edge containing that corner is making an angle 45^0 with PP. The station point is 40 mm in front of the PP, 50 mm above the GP and lies in central plane which is at a distance of 70 mm left to the corner nearest to the PP. Draw the perspective view of the plane. [15]

---ooOoo---